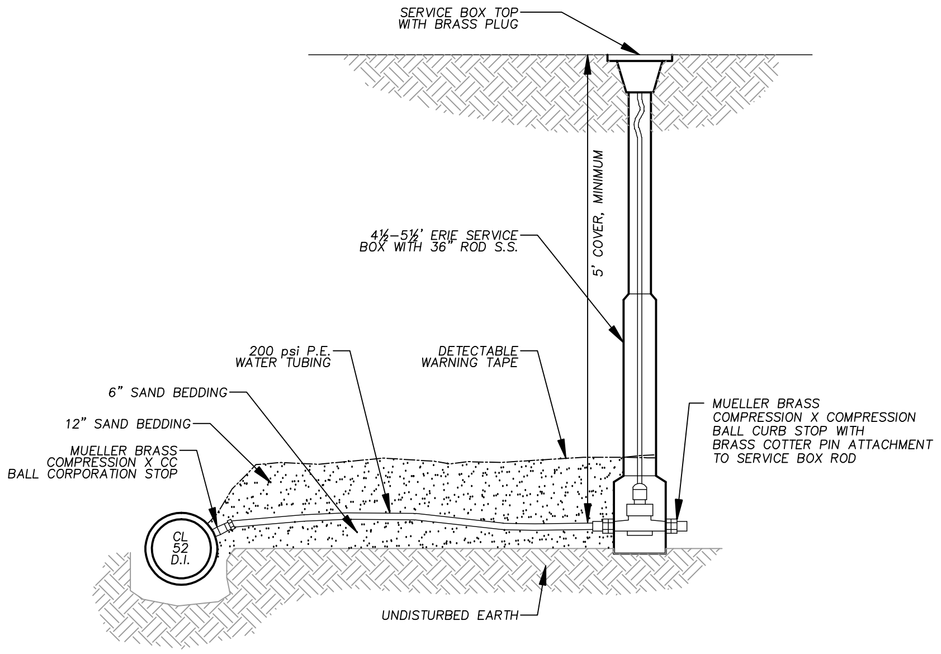

SERVICE INSTALLATION

NOT TO SCALE

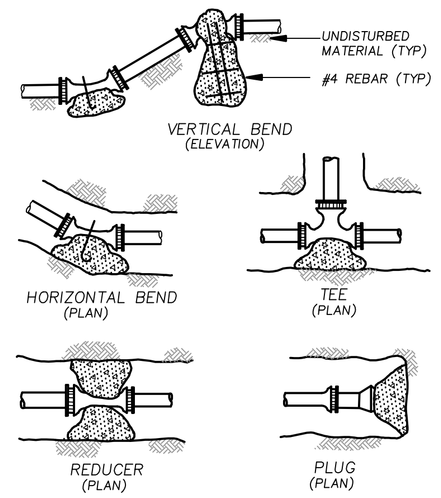

AREA OF BEARING FACE OF CONCRETE THRUST BLOCKS IN SQUARE FEET BASED ON 250 P.S.I. & 1.5 TONS/S.F. ALLOWABLE SOIL BEARING CAPACITY

PIPE SIZE (M.)	1/4 BEND	1/8 BEND	1/16 BEND	PLUG & TEES
4,6,8	6.0	2.9	2.3	4.5
10	9.6	5.2	2.3	6.7
12	13.3	6.7	3.7	9.6
16	24.0	11.8	3.7	17.0

NORMAL FITTING DIAMETER	BEARING AREA – SQ. FT. FITTING				
	90° BEND	45° BEND	BETWEEN 10°–45°	BRANCH OF TEE	DEAD END
6"	4	2	2	4	4
8"	7	4	3	5	5

1. ALL BENDS, TEES, WYES, HYDRANTS AND DEAD ENDS SHALL BE BRACED WITH CONCRETE THRUST BLOCKS.
2. BEARING AREA (H X L) IS AREA OF CONE IN CONTACT WITH WALL OF TRENCH.
3. HEIGHT (H) & LENGTH (L) AS REQUIRED TO OBTAIN BEARING AREA IN TABLE.
4. BOULDERS ARE NOT TO BE USED AS THRUST BLOCKS.

THRUST BLOCK DETAILS

NOT TO SCALE

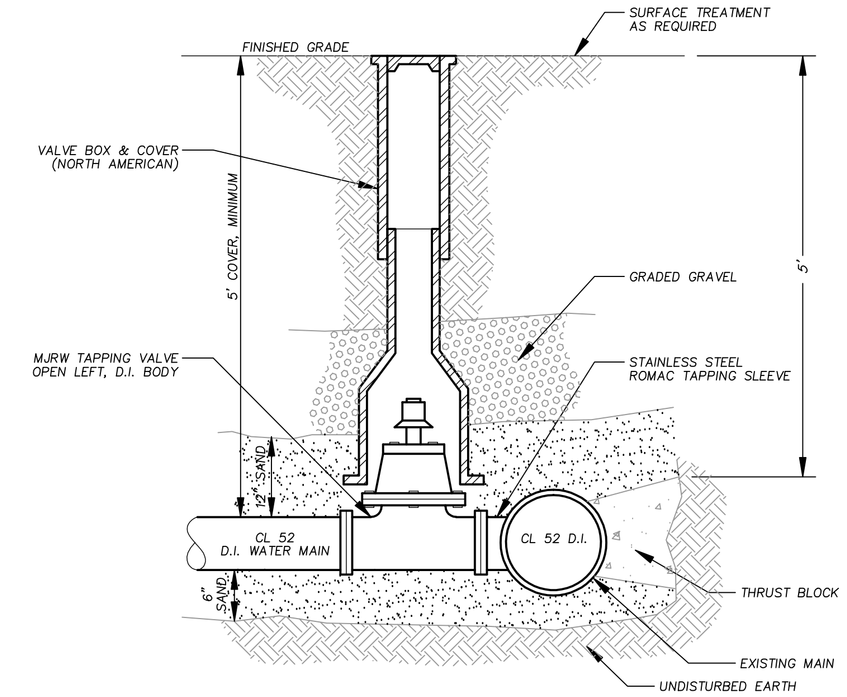

TAPPING SLEEVE & VALVE ASSEMBLY

NOT TO SCALE

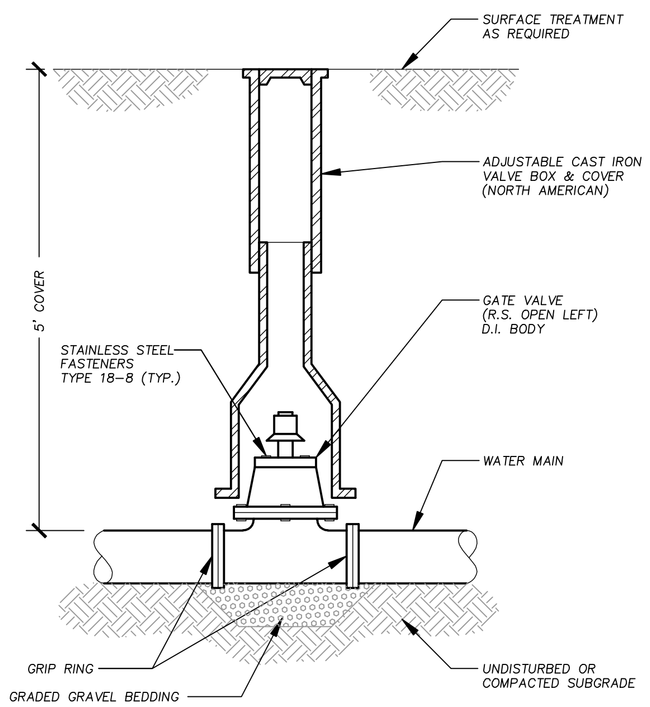

GATE VALVE AND BOX

NOT TO SCALE

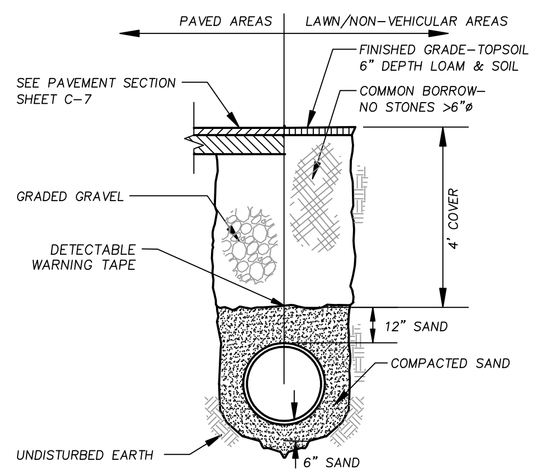

WATER MAIN INSTALLATION

NOT TO SCALE

WATER SYSTEM NOTE: ALL MATERIALS, METHODS, AND CONSTRUCTION SHALL CONFORM TO THE REQUIREMENTS OF THE GROTON WATER DEPARTMENT. TECHNICAL SPECIFICATIONS ARE SUBJECT TO CHANGE WITHOUT NOTICE. CHECK WITH THE GROTON WATER DEPARTMENT PRIOR TO INSTALLATION OF ANY PIPE OR APPURTENANCES.

NOTES:

1. ROADWAY PATCH AND BASE/SUB–BASE SHALL BE INSTALLED AS DIRECTED BY THE HIGHWAY SUPERINTENDENT.

2. BEDDING, BLANKET, & BACKFILL MATERIALS SHALL BE COMPACTED TO 90% MAXIMUM DENSITY (MODIFIED PROCTOR) AT OPTIMUM MOISTURE CONTENT FOR BOTH CROSS COUNTRY AND ROADWAY INSTALLATION.

3. ALL MATERIALS, INSTALLATION TECHNIQUES, PROCEDURES, INSPECTIONS, AND TESTING SHALL BE IN COMPLIANCE WITH THE REQUIREMENTS OF THE SEWER RULES AND REGULATIONS UNLESS OTHERWISE APPROVED BY THE SEWER SUPERINTENDENT IN WRITING.

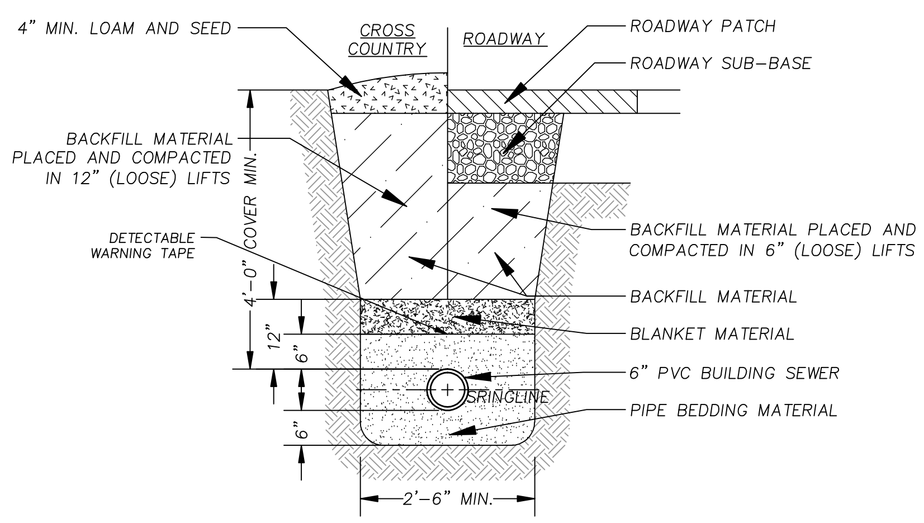

BUILDING SEWER TRENCH

NOT TO SCALE

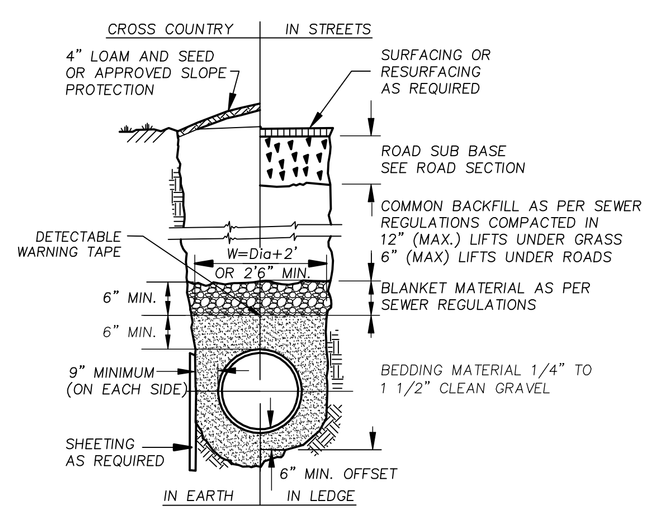

NOTE:
1. BOTH THE BEDDING AND BLANKET MATERIAL SHALL BE COMPACTED IN 6" LOOSE LIFTS TO 90% MAXIMUM DRY DENSITY PER THE MODIFIED PROCTOR TEST.
2. ALL UNSUITABLE MATERIAL SHALL BE REMOVED AND REPLACED WITH GRAVEL OR OTHER SUITABLE MATERIAL COMPACTED TO 90% MAXIMUM DENSITY (MODIFIED PROCTOR).

TYPICAL SEWER TRENCH

NOT TO SCALE

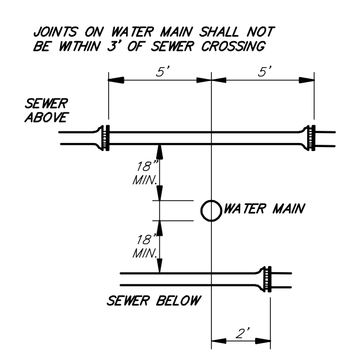

SEWER LINE CROSSING– WATER LINE

NOT TO SCALE

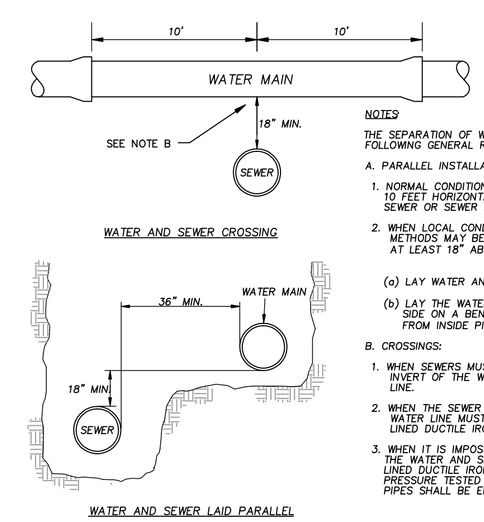

NOTES

THE SEPARATION OF WATER MAINS AND SEWERS SHALL COMPLY WITH THE FOLLOWING GENERAL REQUIREMENTS.

A. PARALLEL INSTALLATION:

1. NORMAL CONDITIONS: THE INSIDE EDGE OF A WATER MAIN SHALL BE LAID AT LEAST 10 FEET HORIZONTALLY FROM THE INSIDE EDGE OF ANY SANITARY SEWER, STORM SEWER OR SEWER MANHOLE.

2. WHEN LOCAL CONDITIONS PREVENT A HORIZONTAL SEPARATION OF 10 FEET, ONE OF TWO METHODS MAY BE EMPLOYED. IN BOTH CASES THE INVERT OF THE WATER LINE MUST BE AT LEAST 18" ABOVE THE CROWN OF THE SEWER LINE.

(a) LAY WATER AND SEWER IN SEPARATE TRENCHES

(b) LAY THE WATER AND SEWER IN THE SAME TRENCH WITH THE WATER MAIN AT ONE SIDE ON A BENCH OF UNDISTURBED EARTH WITH A MINIMUM HORIZONTAL SEPARATION FROM INSIDE PIPE TO INSIDE PIPE OF 36"

B. CROSSINGS:

1. WHEN SEWERS MUST CROSS UNDER WATER MAINS, THE SEWER LAID SUCH THAT THE INVERT OF THE WATER LINE IS AT LEAST 18 INCHES ABOVE THE CROWN OF THE SEWER LINE.

2. WHEN THE SEWER ELEVATION CANNOT BE VARIED TO MEET THE REQUIREMENT, THE WATER LINE MUST BE RELOCATED OR RECONSTRUCTED WITH MECHANICAL JOINT CEMENT LINED DUCTILE IRON PIPE FOR A DISTANCE OF 10 ft ON EACH SIDE OF THE SEWER.

3. WHEN IT IS IMPOSSIBLE TO OBTAIN EITHER OR BOTH OF THE ABOVE REQUIREMENTS, BOTH THE WATER AND SEWER LINES SHALL BE CONSTRUCTED OF MECHANICAL JOINT CEMENT LINED DUCTILE IRON PIPE OR OTHER EQUIVALENT MATERIAL. BOTH PIPES SHALL BE PRESSURE TESTED BY AN APPROVED METHOD TO ASSURE WATER TIGHTNESS OR BOTH PIPES SHALL BE ENCASED IN CONCRETE.

WATER AND SEWER IN SAME TRENCH

NOT TO SCALE

MAGUIRE GROUP

Maguire Group Inc.
Architects / Engineers / Planners
33 Commercial Street, Suite 1
Foxborough, Massachusetts 02035
508-543-1700
www.maguiregroup.com

Consultants:
Places Associates, Inc.
Planning, Landscape Architecture, Civil Engineering, Surveying
510 KING STREET, SUITE 9
LITTLETON, MA 01460
978.486.0334
978.486.0447 Fax
EMAIL places@verizon.net

REVISIONS		
Number	Description	Date
1	No changes this sheet	1/11/12
2	No Revisions this sheet	2/29/12
3	Invasives Remediation	5/1/12
4	Per Peer Review Comments	7/27/12
5	No Revisions this sheet	8/7/12
6	Planning Board Submission	9/19/12

Stamp:

ISSUED FOR:

REVIEW

GROTON ELECTRIC LIGHT
NEW OFFICE & GARAGE FACILITIES
23 STATION AVENUE
GROTON, MA 01450

Key Plan:

Graphic Scale:

Project No.: 19204

Date: November 28, 2011

Scale: AS NOTED

Designed By: SEC

Drawn By: SEC

Sheet Contents:
WATER & SEWER DETAILS

C-9

SHEET ____ OF ____