REVIEWED BY: CIVIL: ________ ARCH: ________ STRU: ________ PLUM: ________ FIRE: ________ MECH: ________ ELEC: ________

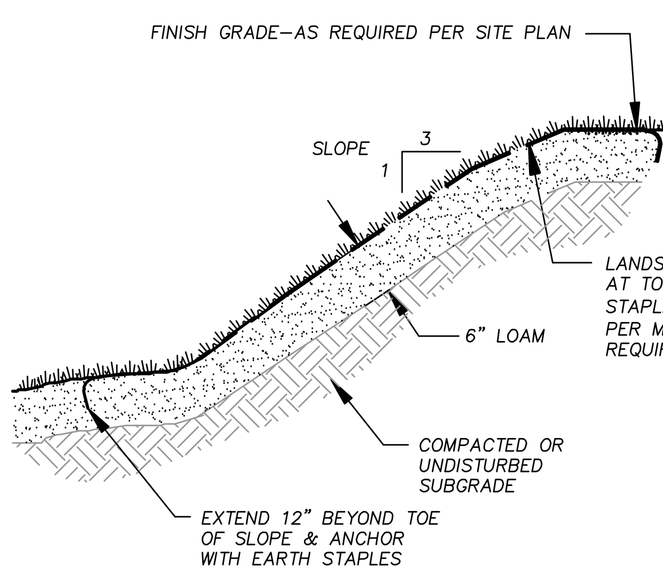

STABILIZED SLOPE
NOT TO SCALE

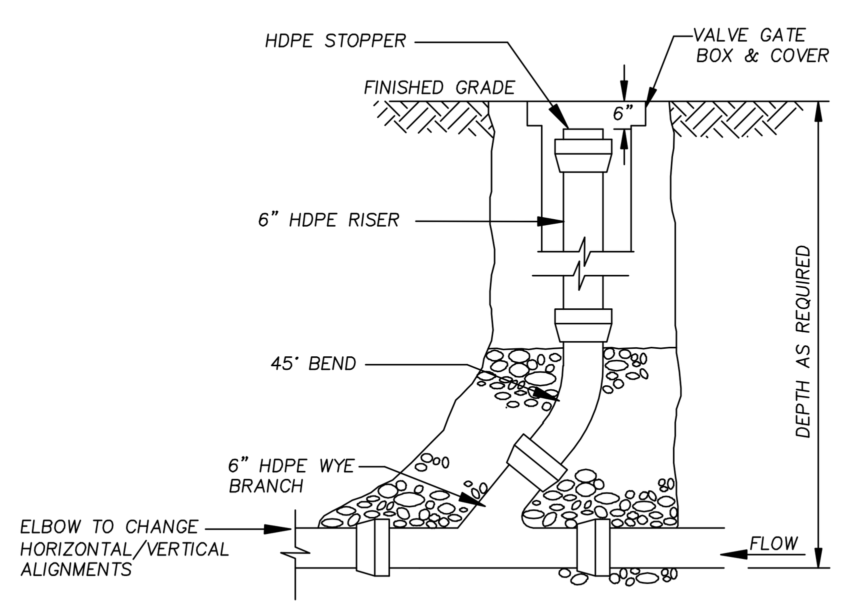

ROOF DRAIN CLEANOUT
NOT TO SCALE

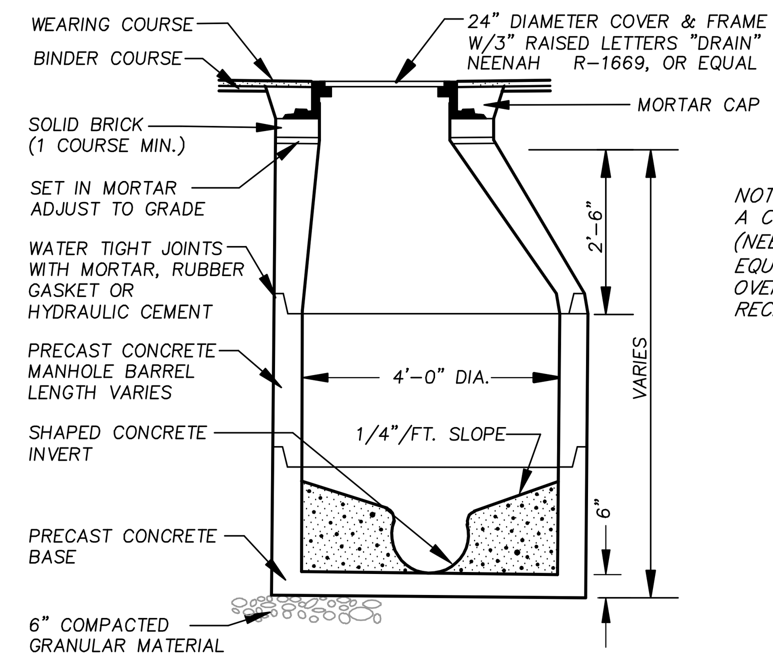

NOTE: DMH B SHALL HAVE A CATCHBASIN FRAME (NEENAH 3405A OR EQUAL) TO ALLOW OVERFLOW FROM RECHARGE SYSTEM

DRAIN MANHOLE DETAIL
NOT TO SCALE

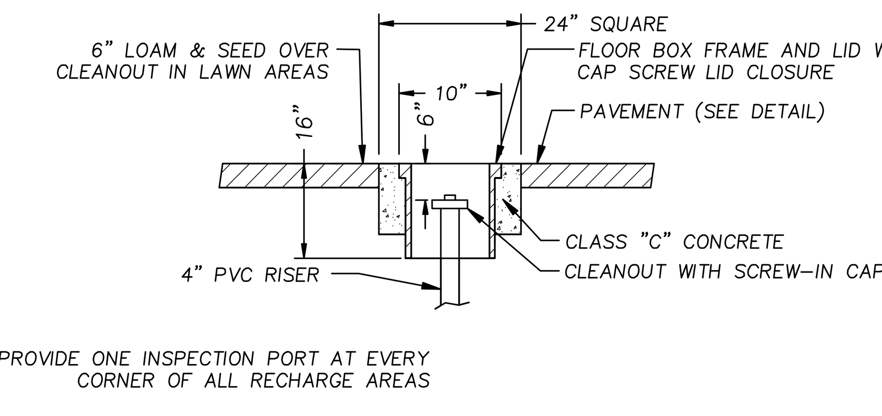

PROVIDE ONE INSPECTION PORT AT EVERY CORNER OF ALL RECHARGE AREAS

INSPECTION PORT/CLEANOUT DETAIL
NOT TO SCALE

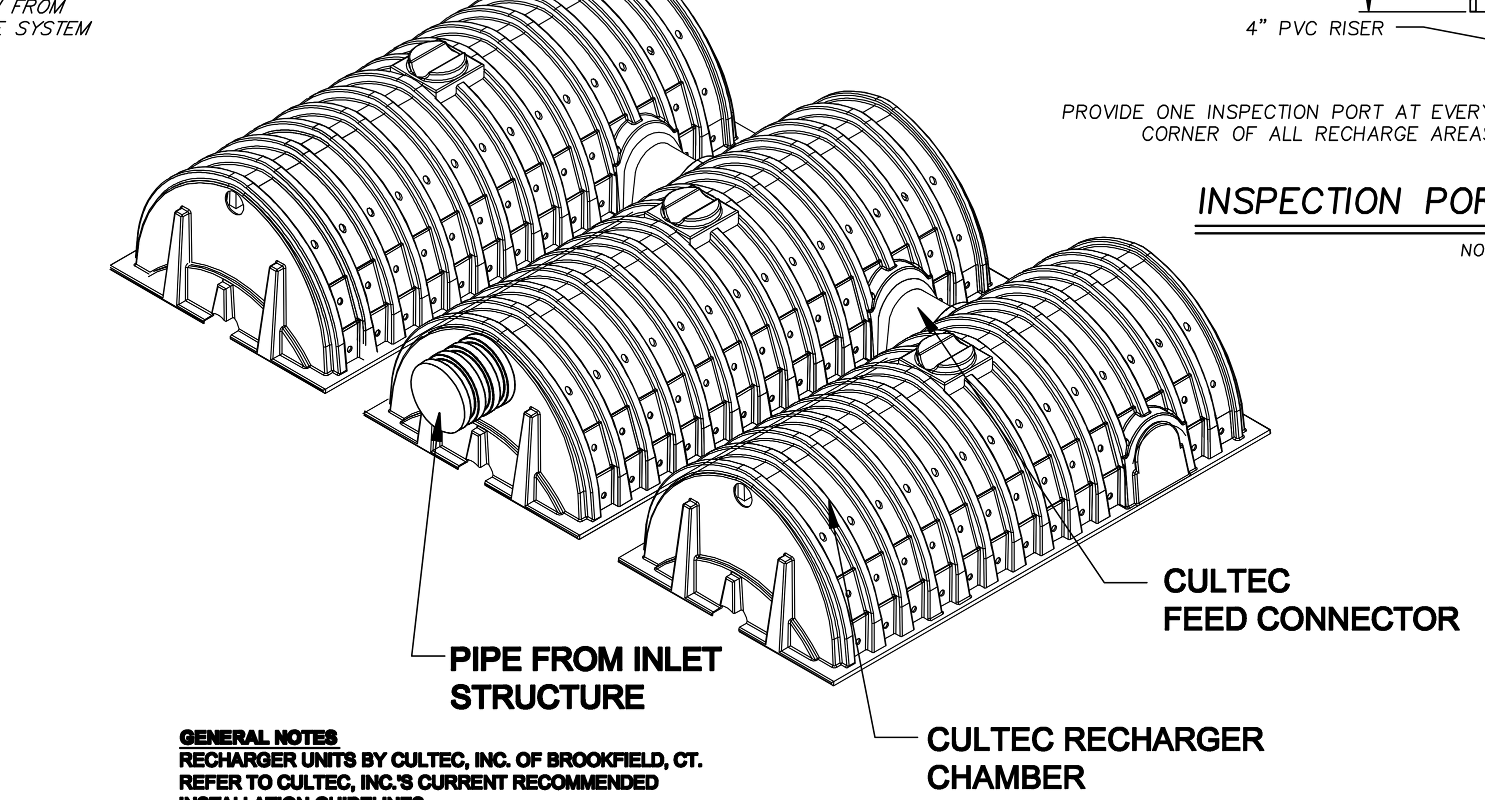

GENERAL NOTES
RECHARGER UNITS BY CULTEC, INC. OF BROOKFIELD, CT.
REFER TO CULTEC, INC.'S CURRENT RECOMMENDED INSTALLATION GUIDELINES.
USE HEAVY DUTY FOR TRAFFIC AND/OR HS-25 APPLICATIONS.

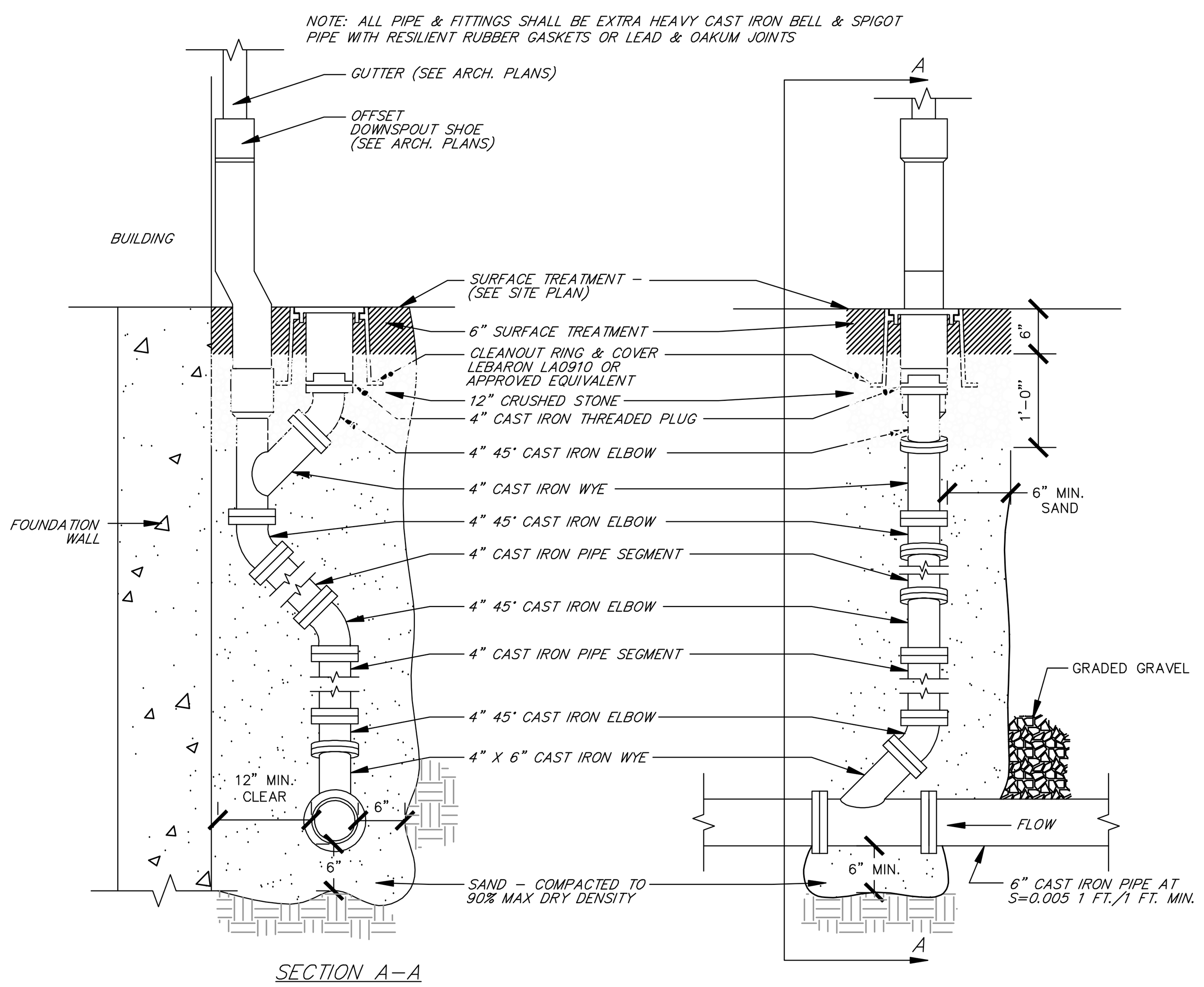

ROOF DRAIN CONNECTION
NOT TO SCALE

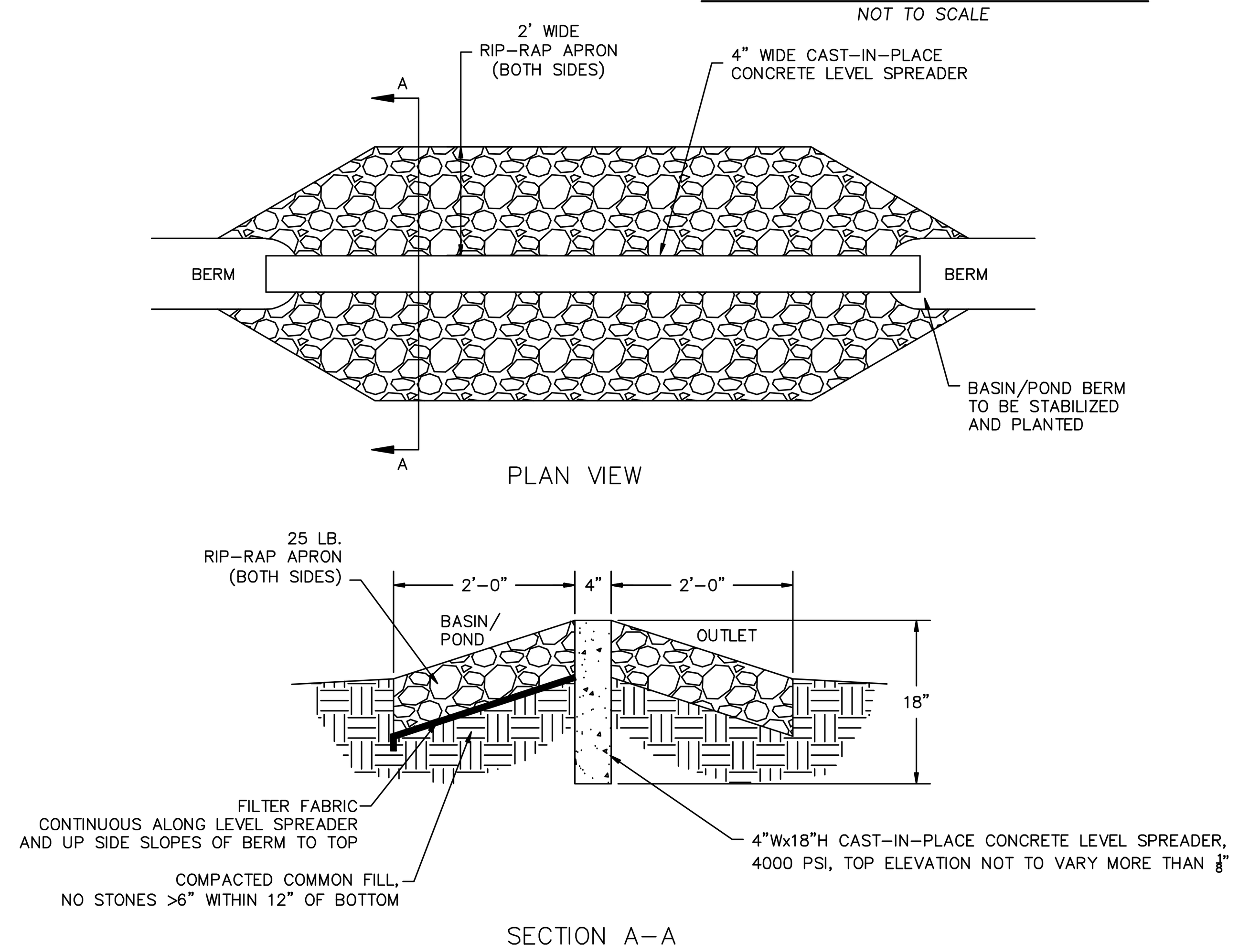

LEVEL SPREADER/BASIN OVERFLOW
NOT TO SCALE

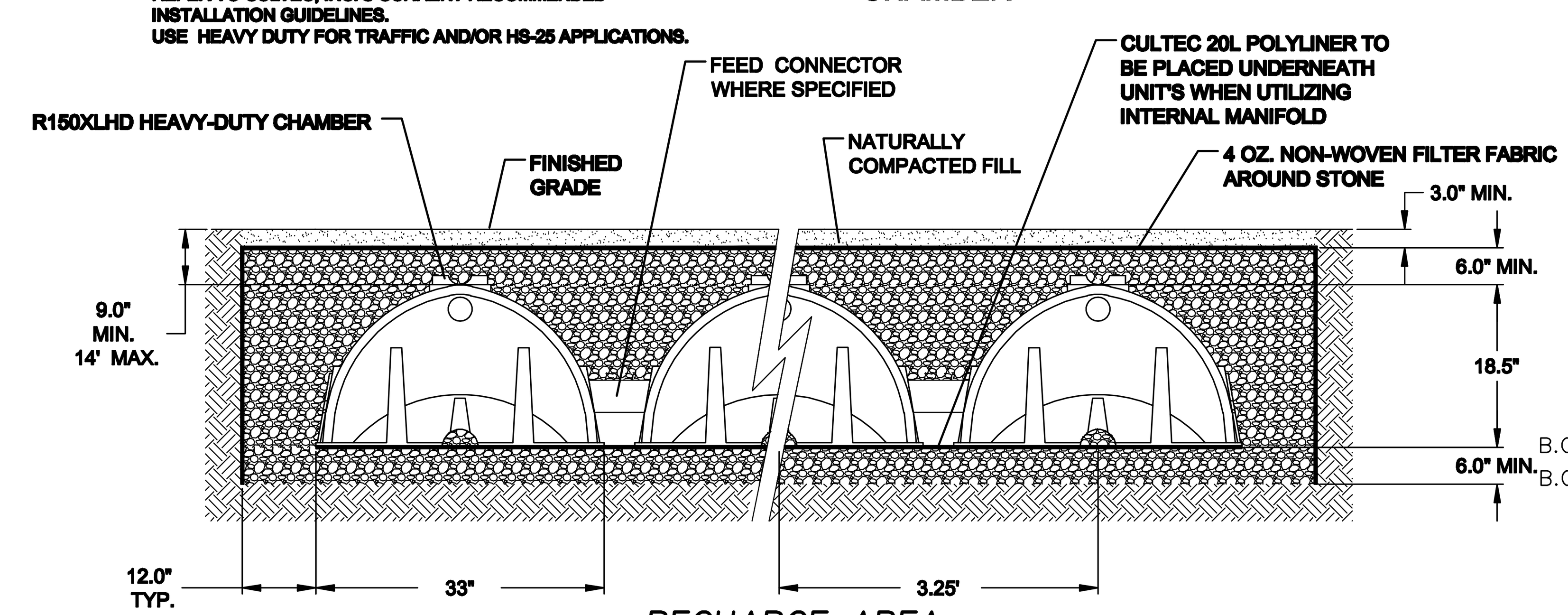

RECHARGE AREA
NOT TO SCALE

NOTE:
THE RECHARGE AREA SHALL BE PROTECTED FROM SOIL COMPACTION BY CONSTRUCTION VEHICLES. THE RECHARGE AREA SHALL NOT BE USED AS A TEMPORARY SETTLING BASIN. ANY CONSTRUCTION SEDIMENT OR UNSUITABLE FILL SHALL BE REMOVED FROM WITHIN 5 FEET OF THE RECHARGE SYSTEM. ANY FILL REQUIRED SHALL BE CLEAN GRAVEL FILL. NO SEDIMENT SHALL BE ALLOWED TO COLLECT IN THE RECHARGE AREA UPON THE PLACEMENT OF THE CLEAN GRAVEL FILL OR STONE.

LONGITUDINAL SLOPE RANGES FROM 0.005 FT/FT TO 0.100 FT/FT –SEE SITE PLAN.

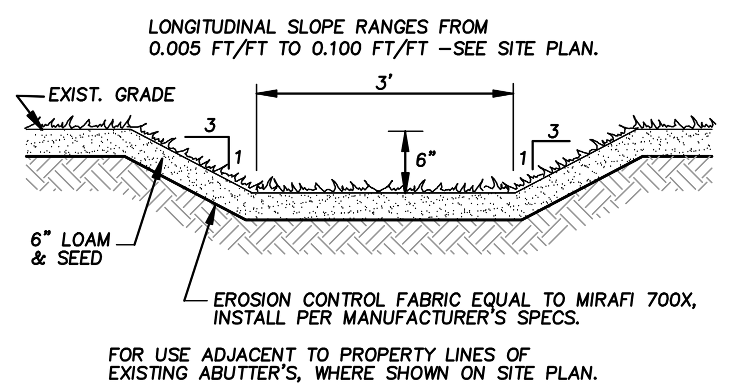

FOR USE ADJACENT TO PROPERTY LINES OF EXISTING ABUTTER'S, WHERE SHOWN ON SITE PLAN.

GRASSED SWALE
NOT TO SCALE

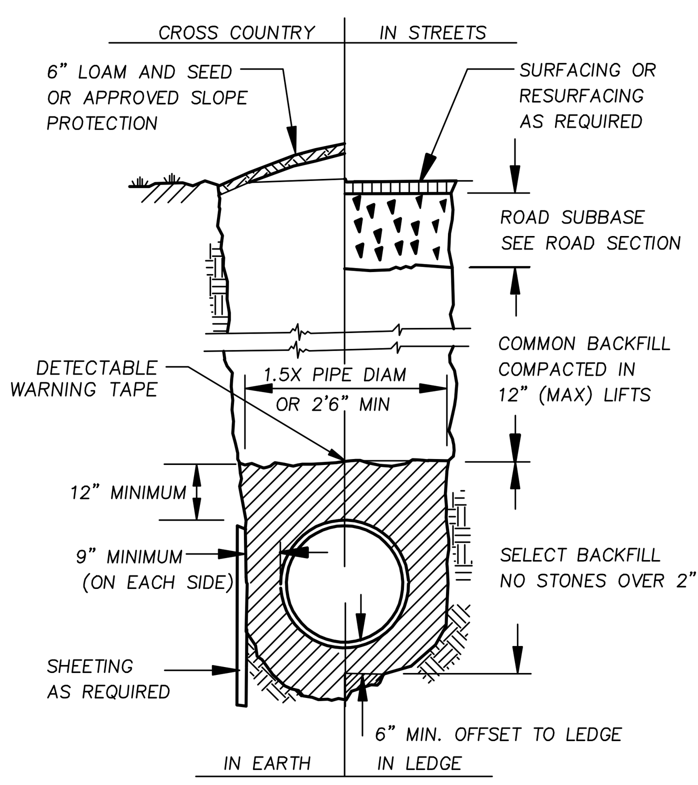

DRAINAGE TRENCH
NOT TO SCALE

RIP–RAP SPECIFICATIONS

STONE SIZE	% OF TOTAL WEIGHT SMALLER THAN GIVEN SIZE
100 LB.	100%
60 LB.	80%
25 LB.	50%
2 LB.	NOT TO EXCEED 10%

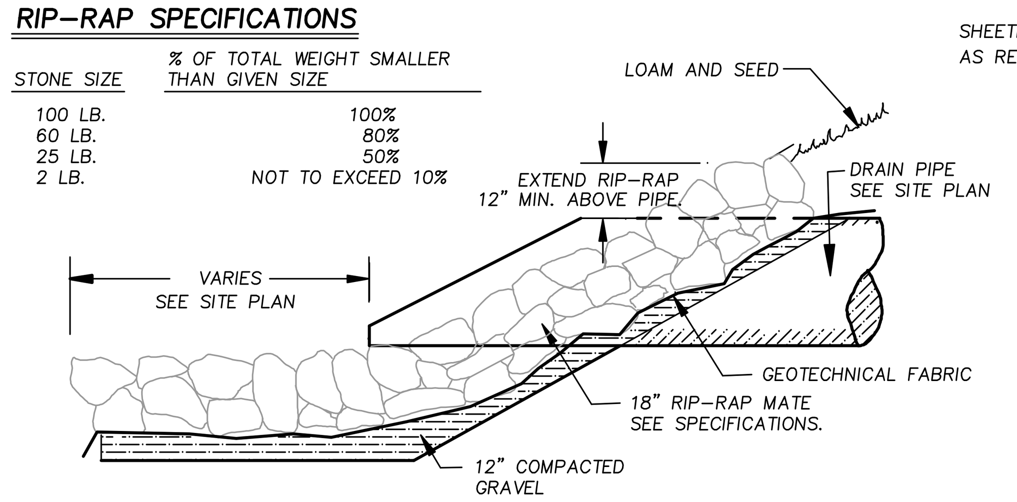

FLARED END RIP–RAP INLET/OUTLET
NOT TO SCALE

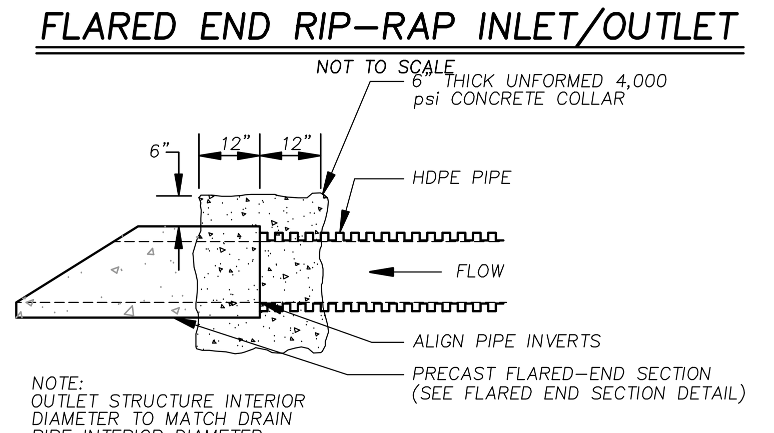

NOTE:
OUTLET STRUCTURE INTERIOR DIAMETER TO MATCH DRAIN PIPE INTERIOR DIAMETER

FLARED END SECTION/HDPE PIPE CONNECTION
NOT TO SCALE

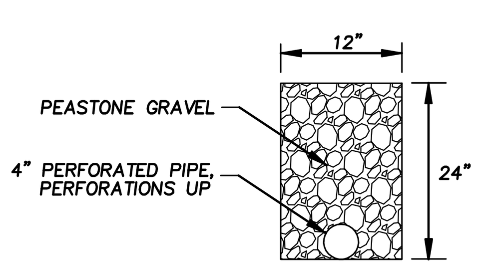

PEASTONE GRAVEL DIAPHRAM
NOT TO SCALE

NOTES:

1. FLOOR DRAIN HOLDING TANK SHALL BE A DOUBLE WALL FIBERGLASS TANK SUPPLIED BY CONTAINMENT SOLUTIONS, INC., XERXES CORPORATION OR APPROVED EQUIVALENT.
2. TANK SHALL BE SET LEVEL AND INSTALLED IN ACCORDANCE WITH MANUFACTURERS INSTRUCTIONS.
3. WELDED JOINTS MAY BE SUBSTITUTED FOR MECHANICAL FITTINGS WHERE APPLICABLE.
4. THE HOLDING TANK SHALL BE SUPPLIED WITH A LIQUID–SENSOR MONITORING SYSTEM FOR DRY ANNULAR SPACE OR APPROVED EQUAL.
5. BACKFILL MATERIAL SHALL BE PEA GRAVEL CONSISTING OF ROUNDED PARTICLES RANGING IN SIZE FROM 1/8" TO 3/4" WITH NO MORE THAN 5% PASSING THE #8 SIEVE OR CRUSHED STONE CONSISTING OF SHARP ANGULAR PARTICLES RANGING FROM 1/8" TO 1/2" WITH NO MORE THAN 5% PASSING THE #8 SIEVE. THE MANUFACTURERS REQUIREMENTS SHALL SUPERSEDE THESE BACKFILL MATERIAL REQUIREMENTS.
6. TANK SHALL BE CAPABLE OF WITHSTANDING AN H20 LOADING AT THE FINISH GRADE.
7. OTHER METHODS OF PROVIDING ANTI FLOATATION BALLAST SUCH AS PINNING TO LEDGE, OR OTHER METHODS ARE ACCEPTABLE SUBJECT TO REVIEW & APPROVAL BY THE DESIGN ENGINEER PROVIDED THE FOLLOWING ALTERNATIVE DESIGN CRITERIA IS MET:

A. THE CALCULATIONS ASSUME THAT GROUNDWATER IS AT FINISH GRADE

B. THE CALCULATIONS ASSUME THAT THE TOP OF THE TANK HAS BEEN EXPOSED (I.E. NO COVER) FOR MAINTENANCE OR REPAIR PURPOSES.

C. THE RESISTING SHEAR STRESS ALONG THE EXCAVATION WALLS IS NEGLIGIBLE

D. THE HOLDING TANK IS EMPTY.

E. THE CALCULATIONS ARE PREPARED AND ENDORSED BY A MASSACHUSETTS REGISTERED PROFESSIONAL ENGINEER.

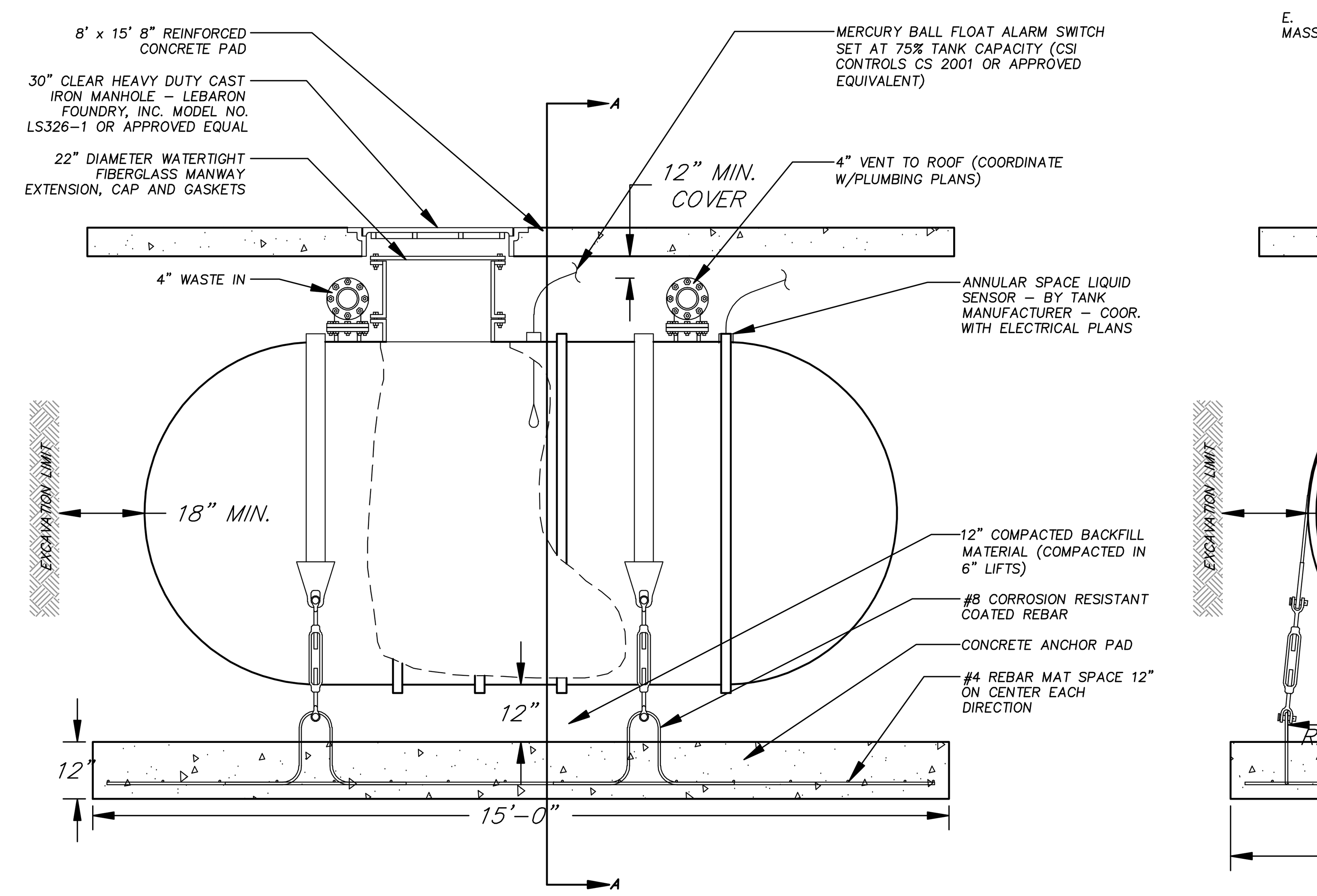

2,500 GALLON DOUBLE WALL FLOOR DRAIN HOLDING TANK
NOT TO SCALE

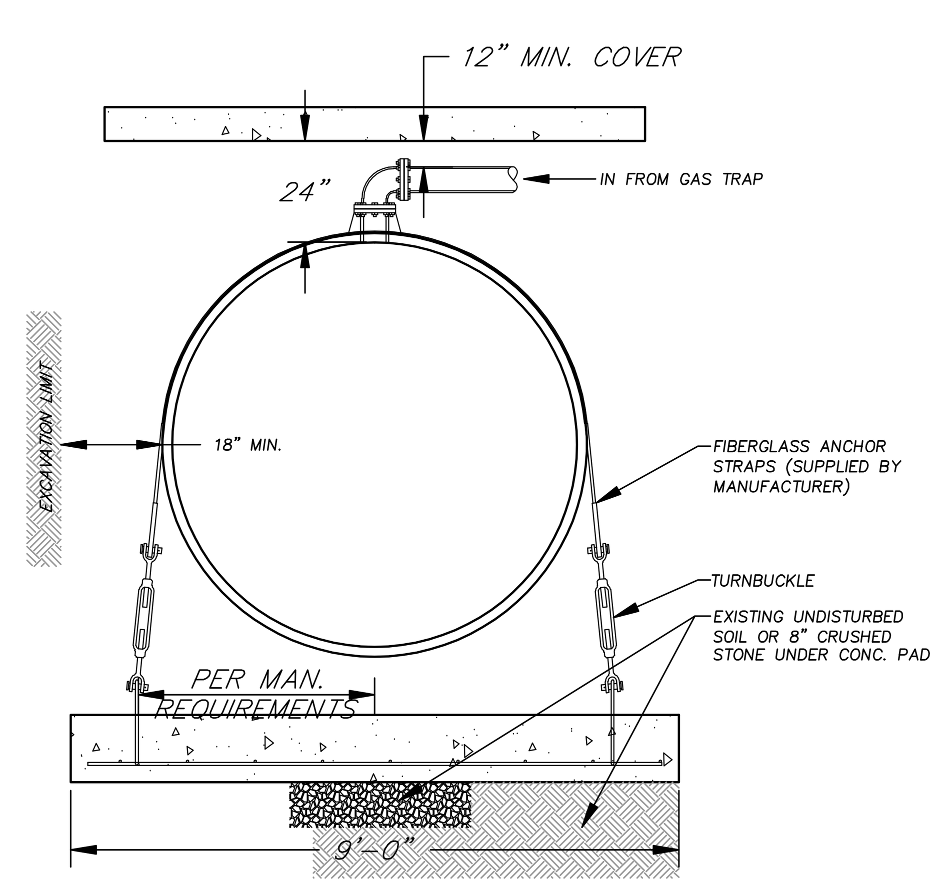

SECTION A–A

MAGUIRE GROUP

Maguire Group Inc.
Architects / Engineers / Planners
33 Commercial Street, Suite 1
Foxborough, Massachusetts 02035
508-543-1700
www.maguiregroup.com

Consultants:
Places Associates, Inc.
Planning, Landscape Architecture, Civil Engineering, Surveying
510 KING STREET, SUITE 9
LITTLETON, MA 01460
978.486.0334
978.486.0447 Fax
EMAIL places@verizon.net

REVISIONS		
Number	Description	Date
1	No changes this sheet	1/11/12
2	No Revisions this sheet	2/29/12
3	Invasives Remediation	5/1/12
4	Per Peer Review Comments	7/27/12
5	Per Peer Review Comments	8/7/12
6	Planning Board Submission	9/19/12

Stamp:

ISSUED FOR:

REVIEW

GROTON ELECTRIC LIGHT NEW OFFICE & GARAGE FACILITIES
23 STATION AVENUE
GROTON, MA 01450

Key Plan:

Graphic Scale:

Project No.: 19204
Date: November 28, 2011 **Scale:** AS NOTED
Designed By: SEC **Drawn By:** SEC

Sheet Contents:
CONSTRUCTION DETAILS

C-8

SHEET ___ OF ___