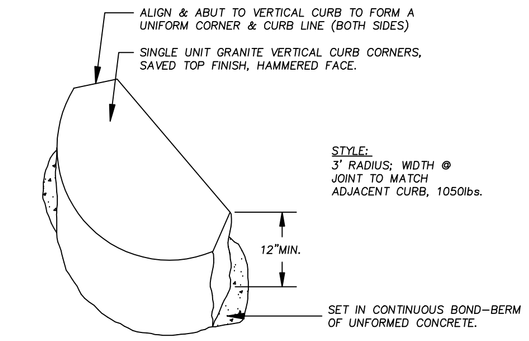

VERTICAL CURB CORNERS

NOT TO SCALE

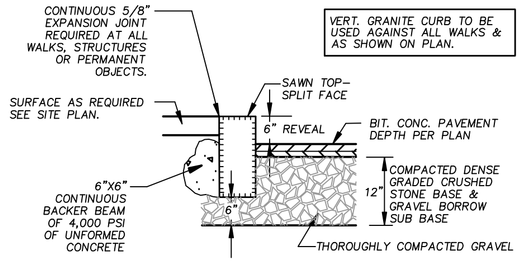

VERTICAL GRANITE CURB

NOT TO SCALE

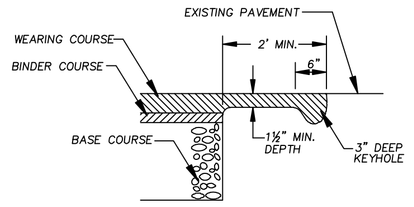

TRANSITION TO EXISTING PAVEMENT

NOT TO SCALE

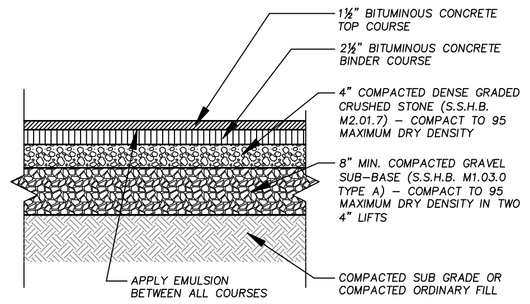

TYPICAL PAVING DETAIL

NOT TO SCALE

NOTE: HEAVY DUTY PAVEMENT SHALL HAVE A TWO 2" BITUMINOUS CONCRETE BINDER COURSES.

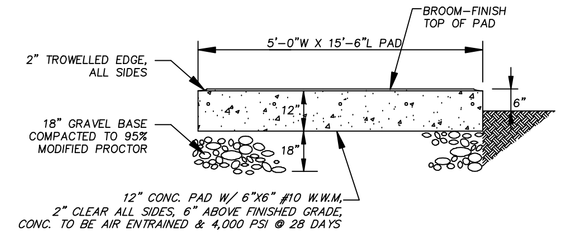

CONCRETE GENERATOR PAD

NOT TO SCALE

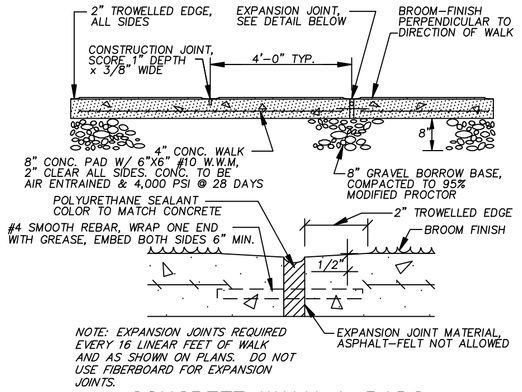

CONCRETE WALK & PADS

NOT TO SCALE

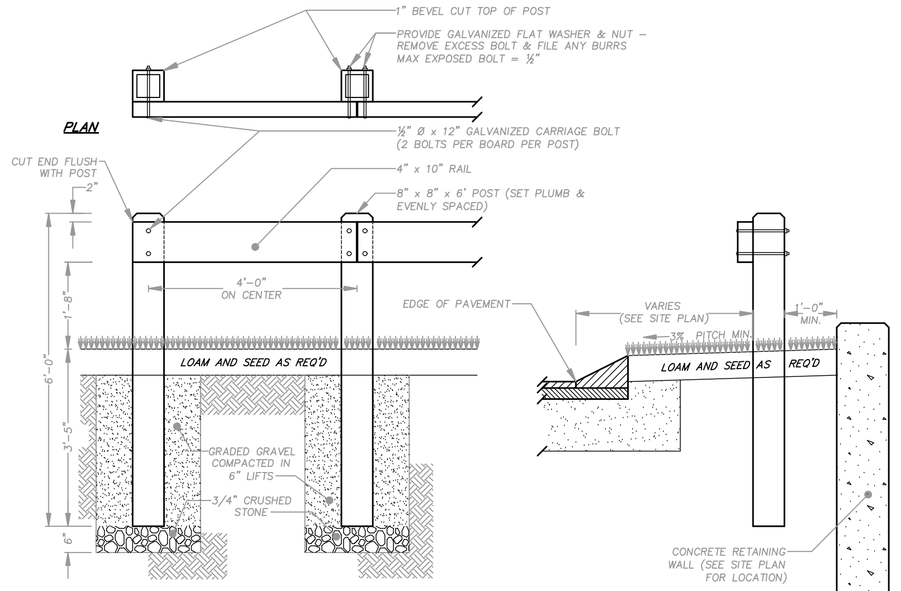

NOTE:
ALL POSTS AND RAILS SHALL BE PRESSURE TREATED DOUGLAS FIR OR SOUTHERN YELLOW PINE TREATED TO A MINIMUM OF 0.40 CCA

WOOD GUIDE RAIL

NOT TO SCALE

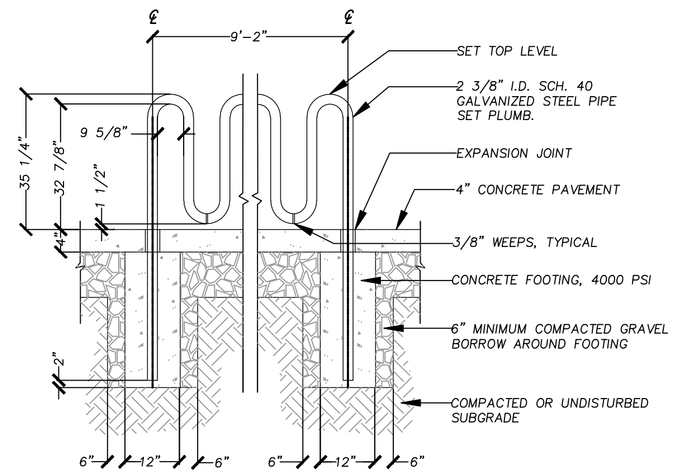

BICYCLE RACK

NOT TO SCALE

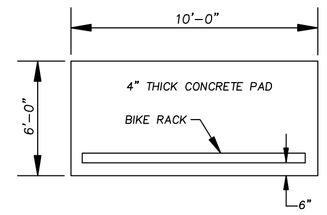

BIKE PAD

NOT TO SCALE

1. CONCRETE STRENGTH F'C 4,000 PSI @ 28 DAYS. DENSITY 150 PCF.
2. CEMENT, PORTLAND TYPE I OR III PER ASTM C150-81.
3. ADMIXTURES, AIR & PLASTICIZERS PER ASTM C233-82.
4. AIR ENTRAINMENT ~~3~~-7% 5. APPROX. WEIGHT: 380 LBS.

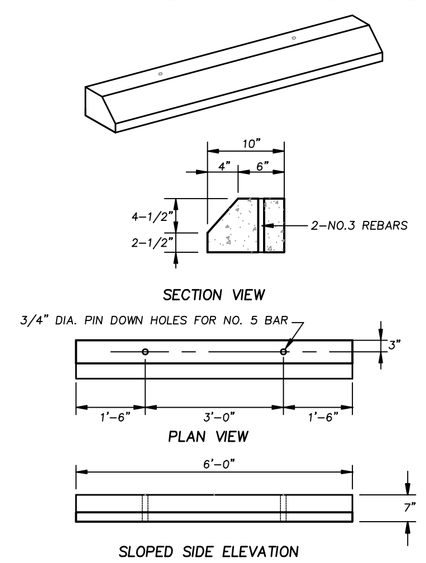

PARKING WHEEL STOP

NOT TO SCALE

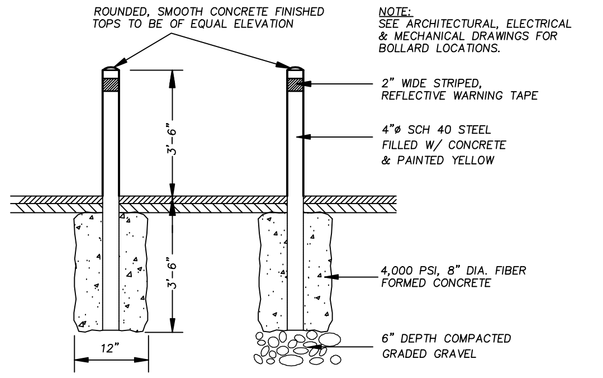

BOLLARD GUARD

NOT TO SCALE

NOTE: UNLESS OTHERWISE SHOWN, ALL BOLLARDS ARE TO BE 6" OFF FINISHED FACES AND EDGES OF PROTECTED OBJECTS.

PAVEMENT STANDARDS. (FROM THE GROTON CODE, CHAPTER 381)

(a)THE PARKING LOT SHALL BE PREPARED IN ACCORDANCE WITH THE REQUIREMENTS OF § 381-22G, GRAVEL BASE.

(b)THE PARKING LOT SHALL HAVE A CROWN OF 3/8 INCH PER FOOT AND SHALL BE PAVED WITH SSH&B SECTION 460-CLASS I BITUMINOUS CONCRETE (ASPHALT) PAVEMENT. THE PAVING SHALL CONSIST OF A BINDER COURSE OF 2 1/2 INCHES COMPACTED MEASURE. THE TOP COURSE SHALL HAVE 1 1/2 INCHES COMPACTED MEASURE. COMPACTION SHALL BE PERFORMED WITH A MINIMUM TEN-TON ROLLER OR A VIBRATORY ROLLER. [WHEN VIBRATORY ROLLERS ARE USED FOR THE COMPACTION OF BASE AND BINDER MATERIAL THEY SHALL BE OPERATED AT A HIGH AMPLITUDE SETTING AND A LOW-FREQUENCY SETTING IN THE RANGE OF 1,500 TO 1,700 VIBRATIONS PER MINUTE (VPM). WHEN USED FOR THE COMPACTION OF SURFACE COURSES, THEY SHALL BE OPERATED AT A LOW AMPLITUDE SETTING AT A MINIMUM FREQUENCY SETTING OF AT LEAST 2,200 VPM OR HIGHER.] THE TEMPERATURE OF THE MIX, WITHIN A TOLERANCE OF PLUS OR MINUS 15° WHEN DELIVERED AT THE PROJECT SITE, WILL BE GOVERNED BY THE TEMPERATURE OF THE BASE UPON WHICH THE MIX IS PLACED AS OUTLINED IN THE GROTON CODE, CHAPTER 381-40 D (9).

[1] THE INSTALLATION OF THE BITUMINOUS CONCRETE SHALL BE PERFORMED WITH A SELF-PROPELLED MECHANICAL SPREADER AND A TEN- TO FOURTEEN-TON ROLLER OR A VIBRATORY ROLLER.

[2] THE CONTACT SURFACE OF MANHOLES, CATCH BASINS AND OTHER APPURTENANT STRUCTURES IN PAVEMENT AND ABUTTING PAVEMENT OF EXISTING ROADS SHALL BE PAINTED THOROUGHLY WITH A THIN UNIFORM COATING OF BITUMEN (SPECIFICATION RS-1) JUST BEFORE ANY BITUMINOUS CONCRETE MIXTURE IS PLACED AGAINST THEM.

[3] BITUMINOUS CONCRETE SHALL BE PLACED AND COMPACTED ONLY AT SUCH TIMES AS TO PERMIT THE PROPER INSPECTION AND CHECKING BY THE BOARD OR ITS AGENT.

[4] THE PLACEMENT OF BITUMINOUS CONCRETE PAVEMENT SHALL TERMINATE NOVEMBER 15 AND SHALL NOT BE RESUMED PRIOR TO APRIL 1 EXCEPT AS DETERMINED AND DIRECTED, IN WRITING, BY THE BOARD OR ITS DESIGNATED AGENT DEPENDING UPON THE NECESSITY AND EMERGENCY OF ATTENDANT CONDITIONS, WEATHER CONDITIONS AND LOCATION OF THE PROJECT.

(c)THE PLANNING BOARD CAN WAIVE THE PAVING REQUIREMENTS TO PERMIT LOW-IMPACT DEVELOPMENT DESIGN TECHNIQUES.

SIDEWALKS

ALL SIDEWALKS SHALL BE POURED, PORTLAND CEMENT CONCRETE SIDEWALK. SIDEWALK CONSTRUCTION SHALL COMPLY WITH THE FOLLOWING: [ADDED 3-22-2007]

(a)CEMENT CONCRETE SHALL MEET THE REQUIREMENTS SPECIFIED AS M4.02.00 (AIR ENTRAINED 4000 PSI, 3/4 INCH, 610) IN THE MASSACHUSETTS STANDARD SPECIFICATIONS FOR HIGHWAYS AND BRIDGES.

(b)IN CONSTRUCTING ALL CONCRETE SIDEWALKS, THE MATERIAL SHALL BE REMOVED FOR THE FULL WIDTH OF THE SIDEWALK TO A SUBGRADE OF AT LEAST 12 INCHES BELOW THE APPROVED FINISHED GRADE. THE FOUNDATION SHALL CONSIST OF AT LEAST EIGHT INCHES OF GOOD BINDING GRAVEL OR CRUSHED STONE, THOROUGHLY ROLLED AND COMPACTED TO THE SATISFACTION OF THE BOARD OR ITS DESIGNATED AGENT, AND SHALL BE BROUGHT TO GRADE FOUR INCHES BELOW THE APPROVED FINISHED GRADE.

(c)THE CONCRETE SIDEWALK SHALL BE FOUR INCHES IN DEPTH AND SHALL HAVE WELDED STEEL WIRE FABRIC CONFORMING TO AASHTO M55 LOCATED AT MID-DEPTH.

(d)THE FORMS SHALL BE WELL STAKED AND THOROUGHLY GRADED AND SET TO THE ESTABLISHED LINES.

(e)THE CONCRETE SHALL BE PLACED IN ALTERNATE SLABS 30 FEET IN LENGTH EXCEPT AS OTHERWISE APPROVED. THE SLABS SHALL BE SEPARATED BY TRANSVERSE PREFORMED EXPANSION JOINT FILLER 1/2 INCH IN THICKNESS (M9.14.0).

(f)THE SURFACE OF ALL CONCRETE SIDEWALKS SHALL BE UNIFORMLY SCORED INTO BLOCK UNITS OF AREAS NOT MORE THAN 36 SQUARE FEET. THE DEPTH OF SCORING SHALL BE AT LEAST 1/4 OF THE THICKNESS OF THE SIDEWALK.

(g)AFTER TROWELING, THE SURFACE SHALL BE BRUSHED TO PRODUCE A NONSLIP SURFACE.

(h)WHEN COMPLETED, THE WALKS SHALL BE KEPT MOIST AND PROTECTED FROM TRAFFIC AND WEATHER FOR AT LEAST THREE DAYS.

(i) RAMPS FOR THE HANDICAPPED SHALL BE PROVIDED AT ALL INTERSECTIONS, DRIVEWAYS AND AT THE END OF ALL DEAD-END STREETS. THEY SHALL CONFORM TO THE ARCHITECTURAL ACCESS BOARD CURRENT REGULATIONS (521 CMR), AND THE AMERICANS WITH DISABILITIES ACT (ANSI A117.1) CURRENT REGULATIONS.

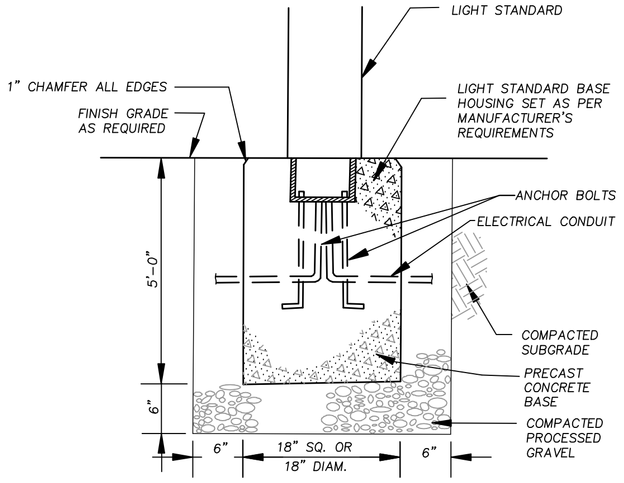

LIGHT STANDARD BASE

NOT TO SCALE

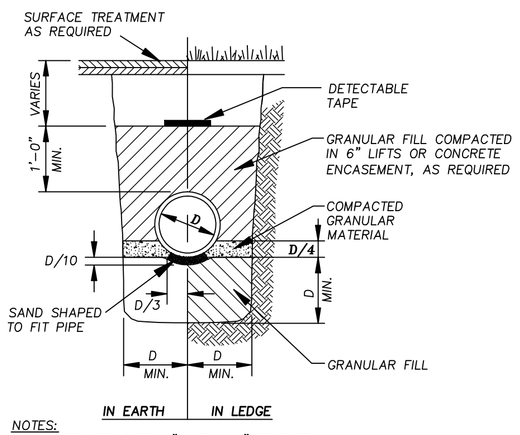

NOTES:
1. NO STONES OVER 2" WITHIN 6" OF PIPE.
2. CONCRETE ENCASEMENT, AS REQUIRED

UTILITY TRENCH DETAIL

NOT TO SCALE

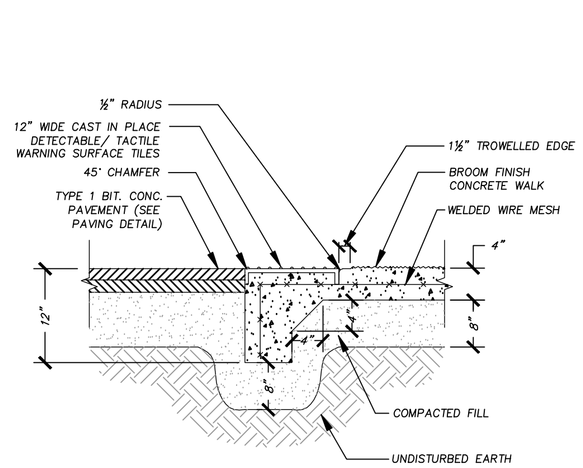

NOTE: MAXIMUM VERTICAL EDGE HEIGHT BETWEEN SURFACES IS ¼" IN ALL DIRECTIONS.

FLUSH WALK/PAVEMENT INTERFACE

NOT TO SCALE

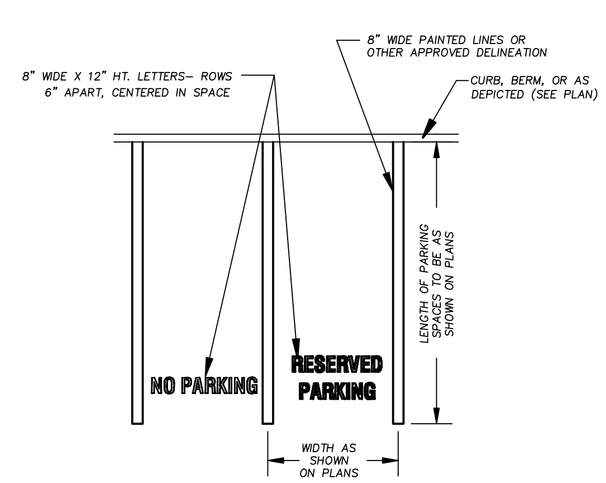

PARKING SPACE TEXT LAYOUT

NOT TO SCALE

SIGN	LEGEND	DIMENSIONS	SPECIFICATIONS
STOP	R1-1	24" OCTAGONAL	MUTCD
AUTHORIZED VEHICLES ONLY	AT-VO	24" X 8"	N/A
DO NOT ENTER	R5-1	24"	MUTCD
NO PARKING ANY TIME	R7-1	12" X 18"	MUTCD
RESERVED PARKING	R7-1B	12" X 18"	MUTCD
VOLUNTARY PARKING	R7-8	12" X 18"	MUTCD

SIGN LEGEND

NOT TO SCALE

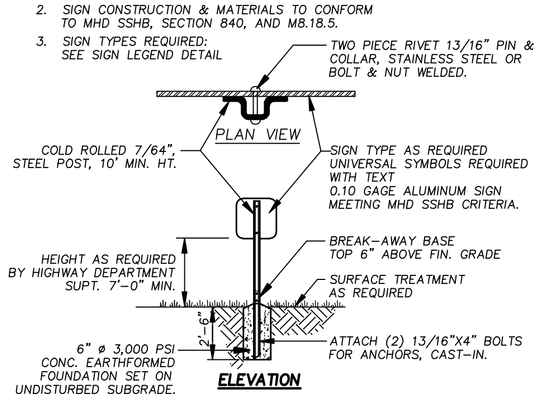

TYPICAL SITE SIGN

NOT TO SCALE

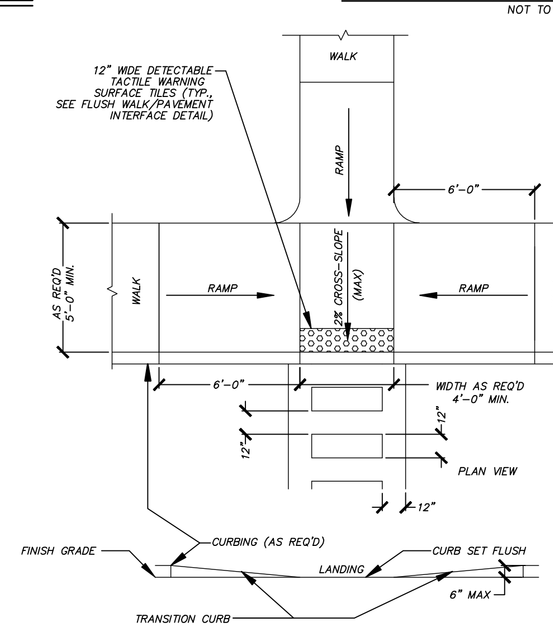

TYPE 2 ACCESSIBLE RAMP

NOTES:

1) PARKING SPACES SHALL MEET THE REQUIREMENTS OF THE CODE OF MASSACHUSETTS REGULATIONS ARCHITECTURAL ACCESS BOARD – 521CMR.

2) PARKING SPACES AND ACCESS ISLES SHALL BE LEVEL WITH SURFACE SLOPES NOT EXCEEDING 1:50 (2%) IN ALL DIRECTIONS, AS MEASURED USING A TWO-FOOT LONG "SMART LEVEL." NO ALLOWANCES CAN BE MADE FOR ANY SLOPE- IN ANY DIRECTION- GREATER THAN 2%.

3) VAN ACCESSIBLE SPACES: ACCESS AISLES SHALL BE A MINIMUM 8'-0" WIDE. A MINIMUM OF ONE VAN SPACE SHALL BE PROVIDED PER SITE.

4) TWO ACCESSIBLE SPACES MAY SHARE A COMMON ACCESS ISLE.

5) A SIGN, IDENTIFYING ACCESSIBLE PARKING SPACES AS RESERVED, SHALL BE LOCATED AT THE HEAD OF EACH SPACE AND NO MORE THAN 10'-0" AWAY. THE SIGN SHALL BE AS SPECIFIED BY THE MANUAL OF UNIFORM TRAFFIC CONTROL DEVICES (MUTCD), R7-8 OR APPROVED EQUAL.

6) SIGNS AT THE HEAD OF VAN ACCESSIBLE SPACES SHALL INCLUDE THE WORDS "VAN ACCESSIBLE," R7-8A

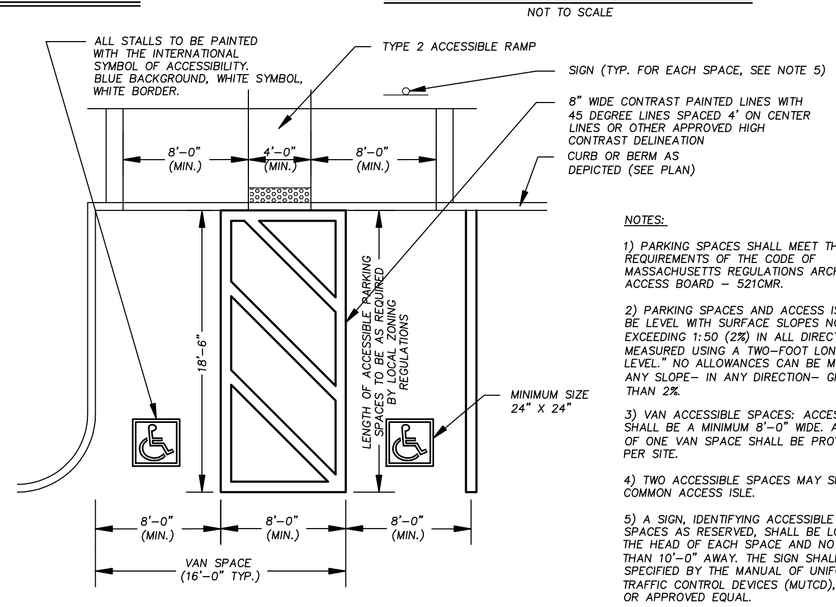

ACCESSIBLE PARKING SPACES

NOT TO SCALE

MAGUIRE GROUP

Maguire Group Inc.
Architects / Engineers / Planners
33 Commercial Street, Suite 1
Foxborough, Massachusetts 02035
508-543-1700
www.maguiregroup.com

Consultants:
Places Associates, Inc.
Planning, Landscape Architecture, Civil Engineering, Surveying
510 KING STREET, SUITE 9
LITTLETON, MA 01460
978.486.0334
978.486.0447 Fax
EMAIL places@verizon.net

REVISIONS		
Number	Description	Date
1	No changes this sheet	1/11/12
2	No Revisions this sheet	2/29/12
3	Invasives Remediation	5/1/12
4	Per Peer Review Comments	7/27/12
5	No Revisions this sheet	8/7/12
6	Planning Board Submission	9/19/12

Stamp:

ISSUED FOR:

REVIEW

GROTON ELECTRIC LIGHT
NEW OFFICE & GARAGE FACILITIES
23 STATION AVENUE
GROTON, MA 01450

Key Plan:

Graphic Scale:

Project No.:	19204
Date: November 28, 2011	Scale: AS NOTED
Designed By: SEC	Drawn By: SEC

Sheet Contents:
CONSTRUCTION DETAILS

C-7

SHEET ____ OF ____